Bulletin 1099
October 15, 1965

Burroughs Corporation

ELECTRONIC COMPONENTS DIVISION

Plainfield, New Jersey

PG-59
ADAPTER PLUG FOR REMOTE NIXIE® TUBE READOUT

The PG-59 and PGR-59 are male adapter plugs which mate with the rectangular NIXIE tube sockets such as type SK-169 and all readout driver modules which use the rectangular NIXIE tube (note 2). It is intended primarily for use in applications where NIXIE tube readouts are to be located remotely. (Figure 3). The plug is supplied in kit form with all hardware (Figure 1) sealed in a plastic envelope.

The PG-59 and PGR-59 are the same except that a resistor board is provided (Figure 1) in the PGR-59 so that isolation resistors can be mounted in the plug. Burroughs will supply and mount the resistors (values to be specified by customer) if required, but at extra cost.

NOTES

1. The cable is not supplied.

2. Modules using the rectangular NIXIE tube are: BIP-8211 (Bull. 1054); BIP-8501, BIP-8507 (Bull. 1039); BIP-9451 (Bull. 1079); BIP-9501 (Bull. 1071); BIP-8404, BIP-8408 (Bull. 1060); BIP-8512 (Bull. 1058).

3. Parts List:
   a. 1-cover
   b. 2-strain clamps (see detail A, Figure 1, and Note 4).
   c. 1-contact plate assembly (with 14 contact pins).
   d. 2-flat head machine screws.
   e. 2-hex nuts.
   f. 2-lockwashers
   g. 2-fillister head machine screws
   h. 1-pan head machine screw. *
   i. 1-resistor mounting board assembly *
   j. 1/4W and/or 1/2W resistors *
   k. 1-spacer *
   l. 1-hex nut *
   m. 1-lockwasher *

   * Necessary only for PGR-59

4. Strain clamps are to be inserted in slots of cover and twisted into mating position to receive screws. (See detail A).

FIG.1

EXPLODED VIEW

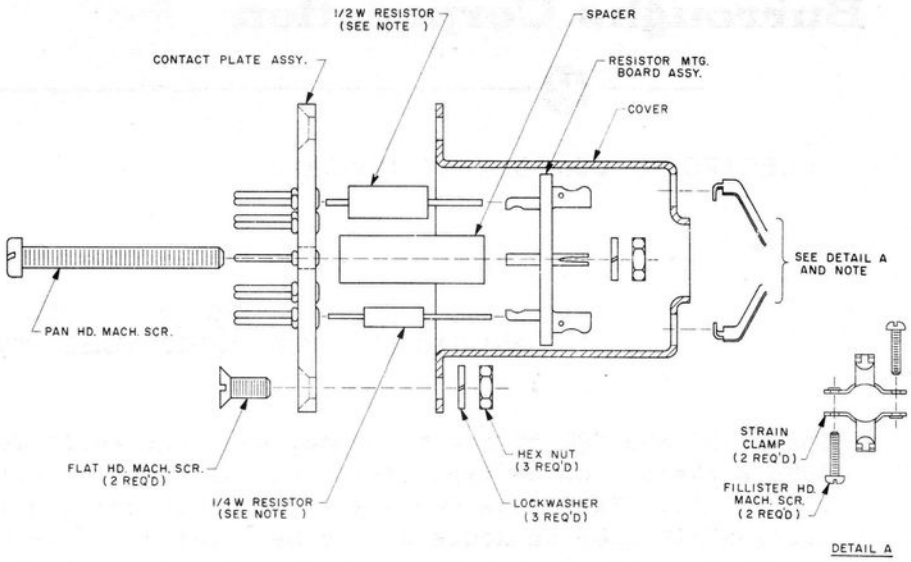

FIG.2

OUTLINE DWG.

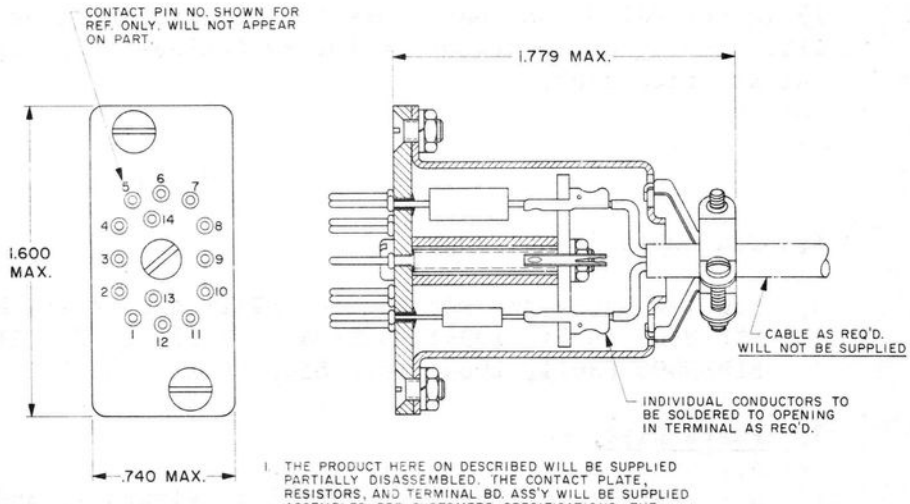

1. THE PRODUCT HERE ON DESCRIBED WILL BE SUPPLIED PARTIALLY DISASSEMBLED. THE CONTACT PLATE, RESISTORS, AND TERMINAL BD. ASS'Y WILL BE SUPPLIED ASSEMBLED PER CUSTOMERS SPECIFICATIONS. THE COVER, STRAIN CLAMPS, MACHINE SCREWS, HEX NUTS, AND LOCKWASHERS WILL BE SUPPLIED AS LOOSE PARTS.
2. ALL PARTS WILL BE SUPPLIED IN A SEALED PLASTIC ENVELOPE.

FIG.3
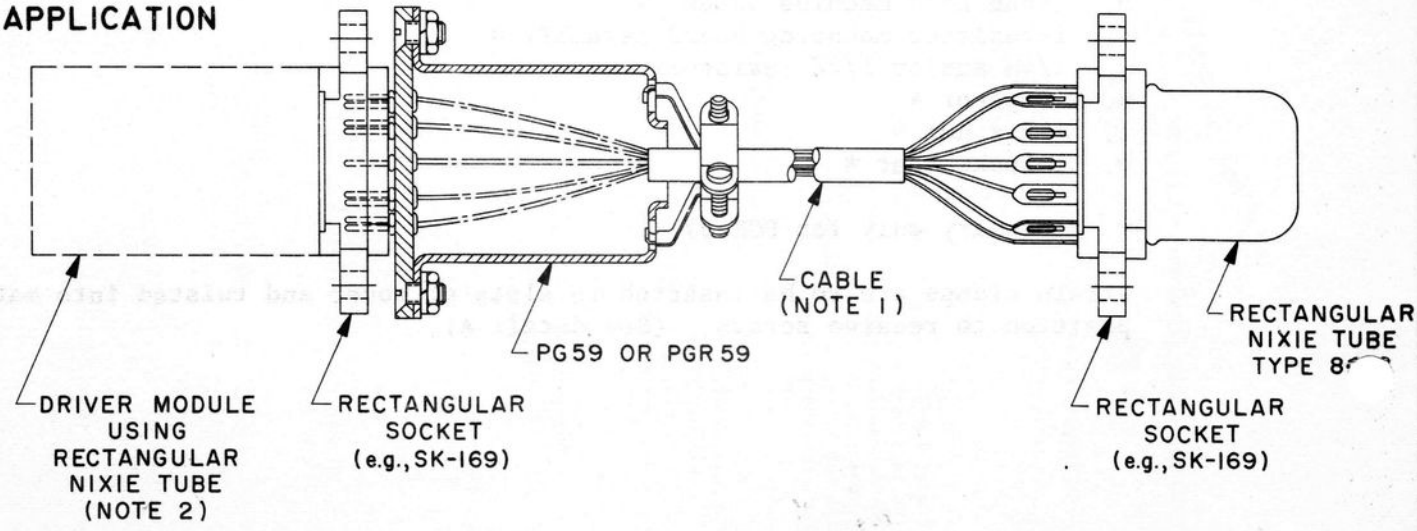
TYPICAL APPLICATION